HOLTSVILLE, NEW YORK 11742
631-207-1200 • FAX: 631.207.0900
www.weissinstruments.com

Project Name: _____

Location: _____

IDN#_____ Quantity:_____

Catalog#_____

CAT NO. XWA11V–KIT | **Walk-in Temp/Door Alarm and Light Manager**

The total walk-in solution for Food Safety and Energy Savings...

Operators can be certain that the temperature inside their walk-in stays in the safe zone by indicating either a High or Low Temperature condition with a visual Alarm and Pulsing Buzzer. To prevent false alarms a built-in adjustable delay is included. The temperature probe can be extended up to 300 ft. for large or multiple units. An open door alarm keeps the cold inside where it belongs. The XWA meets the new '08 Federal Standards for Walk-in's (Sec. 312).

With the cost of energy not going down anytime soon, the Light Management System will automatically turn the lights ON when you open the door and the "AUTO-OFF" feature shuts off the lights after an adjustable time delay. That, in combination with the door open alarm, solves the two biggest energy wasters, leaving the lights on and the door open!

Accurate digital temperature indication, with "product sense" display update, reflects product temperature response, instead of fluctuating air temps.

KIT INCLUDES:

- *Hi/Low temperature alarms w/delays*
- *Lighting management - Auto on/Auto off*
- *Door open alarm w/magnetic door switch*
- *Range –40/230°F*
- *8ft. probe*
- *Battery back-up*
- *Loud buzzer*
- *Pre-wired*
- *Wall Mounting Box*
- *Saves energy*

ALARM CODES

P1	Probe Problem
HA	High Temp Alarm
LA	Low Temp Alarm
dA	Door Open Alarm
Pan	Panic Alarm
DEF	Unit in Defrost
EA	External Alarm

MODEL RC

7/11

APPROVALS:

DATE:

CAT NO. **XWA11V–KIT**

Walk-in Temp/Door Alarm and Light Manager

OVERVIEW

The product consists of a .5" LED display, adjustable high and low temperature alarms, door opening alarms and automatic light management. The unit has a 6 keypad interface, consisting of a SET key, Up and Down keys, Low and High alarm keys, and a Light key. Keypad is password protected to prevent tamporing.The unit has the ability to turn off when extended loading occurs. All settings include appropriate delays to prevent false alarms.

MOUNTING

The product is mounted into a wall mounting box: 6.30"W x 3.78"H x 3"D.

SENSOR

The XWA includes one 8 ft. NTC Thermistor temperature probe, which can be extended up to 300 ft. using standard thermistat wire. Probe to be placed away from the door and away from lights in a manner not to be subject to damage or erroneous temperature readings.

POWER

The XWA is powered by 120Vac (+/-10% 60Hz) and has a relay output of 8A for external alarm devices such as strobe light or phone dialer. It has a 15A relay for the internal lights of the walk-in. The XWA has a 9V battery backup to power the device for up to 36 hours during a power failure. Battery not included. Unit is UL/NSF listed.

INPUTS

The XWA includes a Digital input (voltage free) to accept the magnetic door switch. It has a 2nd Digital Input to accept an optional internal panic alarm switch, gas leak detector or current transformer switch. The current transformer switch indicates a defrost is occurring or if an evaporator fan or compressor fails.

LIGHT CONTROL

The light control feature automatically turns on the lights when the door is open and automatically turns-off the lights 15 minutes after closing the door. The auto-off light feature is adjustable to customer requirements.The light can also be turned on from the keypad on the front of the unit. The XWA meets Federal Energy Independance Act Sec. 312 "Walk-in Coolers and Walk-in Freezers."

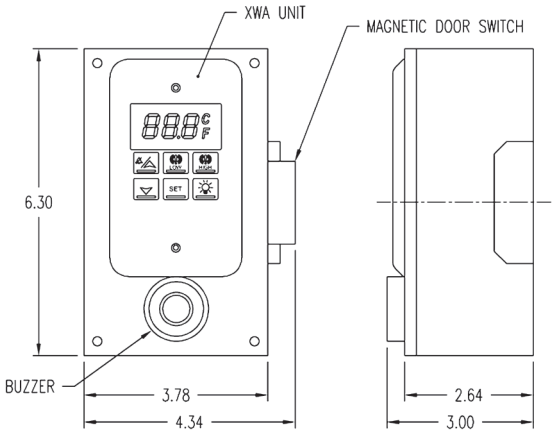

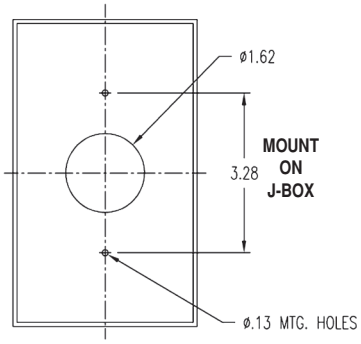

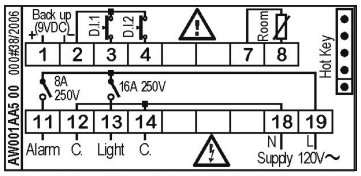

ACCESSORIES

☐ Phone Dialer - iDial

☐ CT Current Transformer - H300

☐ Gas Leak Detector - MGS

☐ Strobe Light - STR

☐ Panic Alarm Switch - PAN

SPECIFICATIONS SUBJECT TO CHANGE WITHOUT NOTICE

WARRANTY
ONE YEAR

WEISS INSTRUMENTS, INC., 905 WAVERLY AVE., HOLTSVILLE, NEW YORK 11742 • 631.207.1200 • FAX: 631.207.0900
Email: sales@weissinstruments.com • www.weissinstruments.com